TABLE OF CONTENTS

INTRODUCTION iii

PART I - R.A.I. APPROVED

Section

Limitations 1
Normal procedures 2
Emergency and malfunction procedures 3
Performance 4
Optional equipment 5

PART II - MANUFACTURER'S DATA

LIST OF REVISED PAGES C-1
Weight and balance 6
Systems description 7
Handling and servicing 8
Supplemental performance information 9

FOR TRAINING ONLY

INTRODUCTION

GENERAL

It is responsibility of the flight crew to be familiar with the contents of the RFM including all revisions and any temporary revision and supplement which are applicable at the time of flight.
The contents of this copy shall correspond with the revisions which are shown on the Log of Pages.

TERMINOLOGY

WARNINGS, CAUTIONS AND NOTES

Warnings, Cautions and Notes are used throughout this manual to emphasize important and critical instructions and are used as follows:

WARNING

An operating procedure, practice, etc., which, if not correctly followed, could result in personal injury or loss of life.

CAUTION

An operating procedure , practice, etc., which, if not strictly observed, could result in damage to, or destruction of, equipment.

NOTE

An operating procedure, condition, etc., which is essential to highlight.

FOR TRAINING ONLY

USE OF PROCEDURAL WORDS

The concept of procedural word usage and intended meaning which has been adhered to in preparing this RFM is as follows:
"Shall" or **"Must"** have been used only when application of a procedure is mandatory.
"Should" has been used only when application of a procedure is recommended.
"May" has been used only when application of a procedure is optional.
"Will" has been used only to indicate futurity, never to indicate a mandatory procedure.
"Condition" has been used to determine if the item under examination presents external damage which could jeopardize its safe operation.
"Secured" has been used to determine if the item under examination is correctly locked; mainly referred to doors and disconnectable items.
"Security" has been used to determine if the item under examination is correctly positioned and installed.

ABBREVIATION

The use of capitol letters in the text, apart from normal grammatical usage indicates the actual wording of marking of indicators, controls or control positions on the helicopter.
Abbreviations and acronyms used throughtout this RFM are defined as follows:

– a.c.	: Alternating current
– AEO	: All Engines Operative
– A.F.C.S.	: Automatic Flight Control System
– A/F	: Airframe
– AGL	: Above Ground Level
– ALS	: Ambient Light Sensor
– AWG	: Aural Warning Generator

FOR TRAINING ONLY

- CAS : Calibrated Airspeed
- CVDR : Cockpit Voice Data Recorder
- CVR : Cockpit Voice Recorder
- DAU : Data Acquisition Unit
- d.c. : Direct current
- EAPS : Engine Air Particle Separator
- ECU : Engine Control Unit
- EDU : Electronic Display Unit
- FCU : Fuel Computer Unit
- FDR : Flight Data Recorder
- Hd : Density altitude
- Hp : Pressure altitude
- IAS : Indicated Air Speed
- IDS : Integrated Display System
- IFR : Instrumental on Flight Rules
- ISA : International Air Atmosphere
- LCF : Low Cycle Fatigue
- LH : Left hand
- MCL : Master Caution Light
- MPOG : Minimum Pitch on Ground
- MFR : Manufacturer
- MWL : Master Warning Light
- N1 : Gas generator turbine speed
- N2 : Power turbine speed
- NR : Rotor speed

FOR TRAINING ONLY

- OAT : Outside Air Temperature
- OEI : One Engine Inoperative
- PAX : Passenger(s)
- PLA : Power Lever Angle (alias Engine Power Lever)
- PMS : Power Management Switch (alias engine mode switch)
- RFM : Rotorcraft Flight Manual
- RH : Right hand
- RPM : Revolutions per minute
- TAS : True Airspeed
- TRQ : Torque
- TOT : Turbine Outlet Temperature
- VFR : Visual Flight Rules
- V_{NE} : Never Exceed Speed
- V_{LO} : Maximum landing gear operating speed
- V_{LE} : Maximum landing gear extended speed.
- V_{MO} : Maximum operating limit speed.
- WOW : Weight on Wheels

FOR TRAINING ONLY

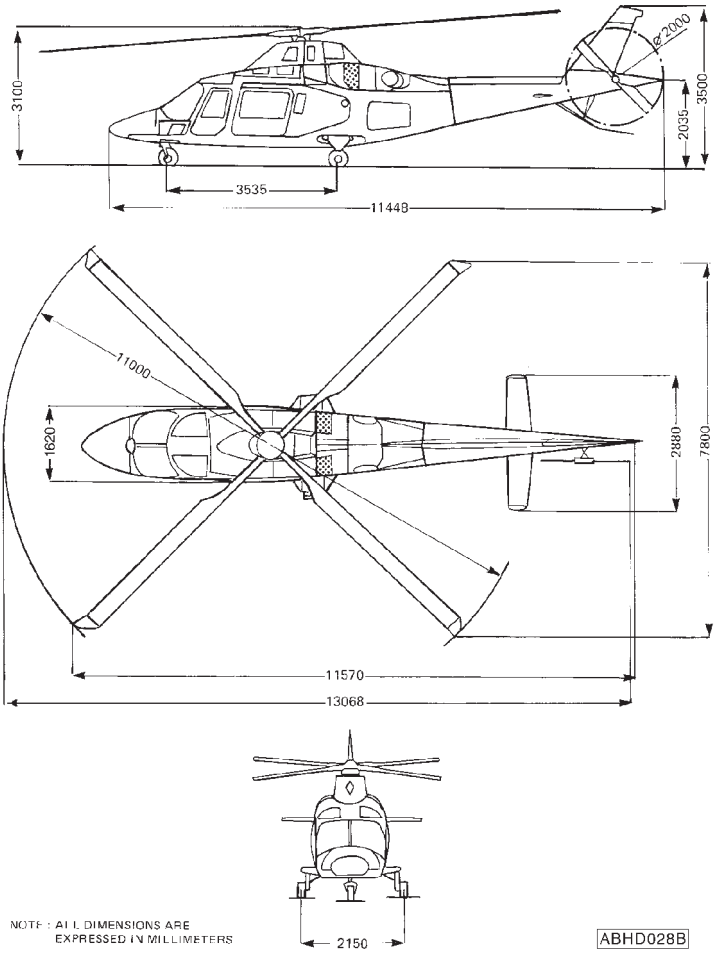

Helicopter - Three Views.

FOR TRAINING ONLY